PROJECT

SQL Data Warehouse & Analytics

SQL Server · Medallion Architecture
EDA · Advanced Analytics · BI Reports

Mohammed Drihmi — Data Analyst

Project At a Glance

2 Source Systems (ERP + CRM)

3 Architecture Layers — Bronze / Silver / Gold

12 Progressive SQL Analysis Scripts

2 BI-Ready Business Reports

PROJECT OVERVIEW

Two Parts — One End-to-End Data Solution

From raw CSV files to a fully modeled warehouse, all the way to advanced SQL analytics and business-ready reports.

01 Data Engineering

Medallion Architecture

Three-layer pipeline: Bronze → Silver → Gold

ERP + CRM Integration

Two source systems unified into one model

ETL Pipelines in SQL

Extract, transform, load

Star Schema Design

Fact + Dimensions optimized for analytics

Data Quality & Cleaning

Deduplication, nulls, type normalization

02 Analytics & Reporting

EDA — Schema Profiling

Explore tables, date ranges, dimension cardinality

Magnitude & Rankings

Core KPIs, Top-N,

Time Intelligence

Monthly trends, running totals, moving averages

Period Comparisons

YoY & MoM using LAG / LEAD functions

Customer & Product Reports

Consolidated BI-ready reports for any tool

BUSINESS PROBLEM

The Business Could Not See Its Own Data

Two disconnected source systems — ERP and CRM — made it impossible to answer even basic business questions.

Context	Problems	Objective
Multi-country retail operation, 3+ years of data	No unified customer view — profile ≠ purchases	Build a modern warehouse (Medallion Architecture)
Two sources : ERP (operations) and CRM (customers)	Cannot identify which products drive revenue	Consolidate ERP + CRM into one clean model
Data existed but was completely disconnected	No visibility into trends or seasonality	Enable analytical SQL reporting and BI
No analytical layer for decision-making	All decisions made on intuition, not data	Deliver insights on customers, products, trends

PART

01

Data Engineering

Medallion Architecture · ETL Pipelines · Star Schema · Data Quality

- Bronze Layer — Raw ingestion
- Silver Layer — Cleanse & standardize
- Gold Layer — Star schema analytics

ARCHITECTURE

Medallion Architecture — Three-Layer Data Pipeline

Each layer validates and elevates data quality before passing downstream — raw ingestion to business-ready analytics.

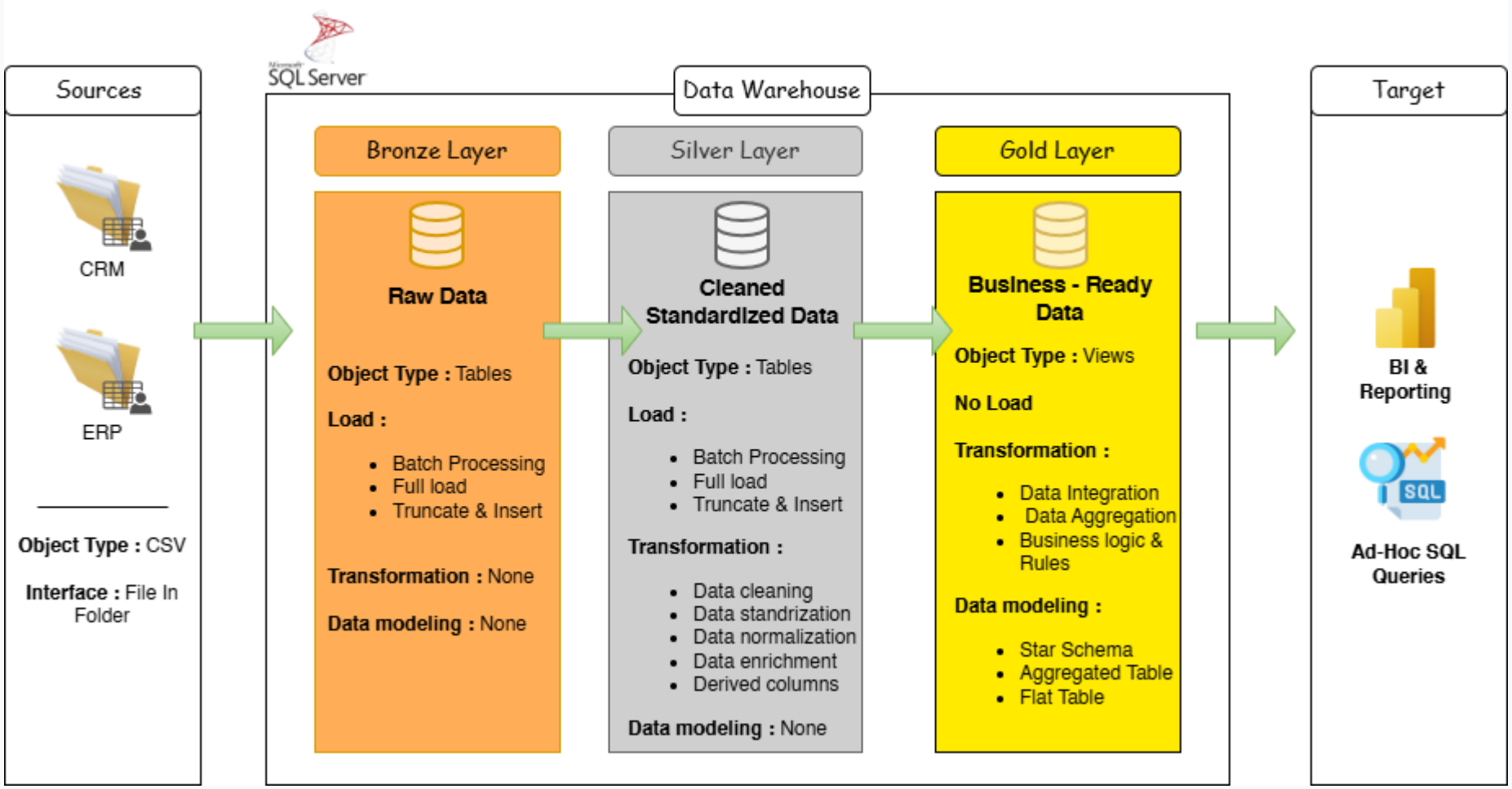

Two Source Systems — One Unified Data Model

ERP and CRM data arrive as separate CSV files with different schemas, keys, and formats. Integration resolves all conflicts.

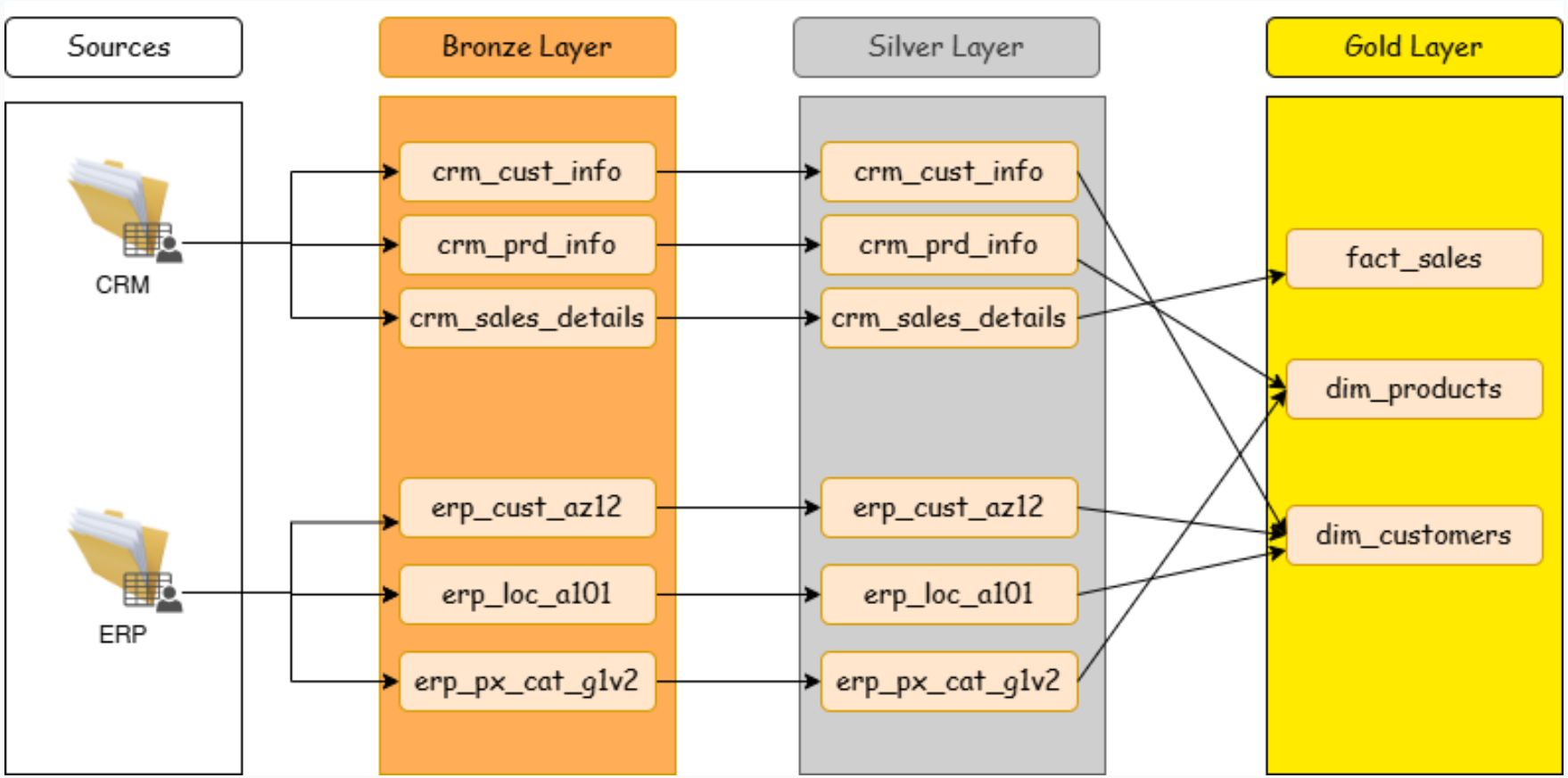

Star Schema — Optimized for Analytical Queries

1 Fact table + 2 Dimension tables. Fewer JOINs, faster queries, Power BI compatible.

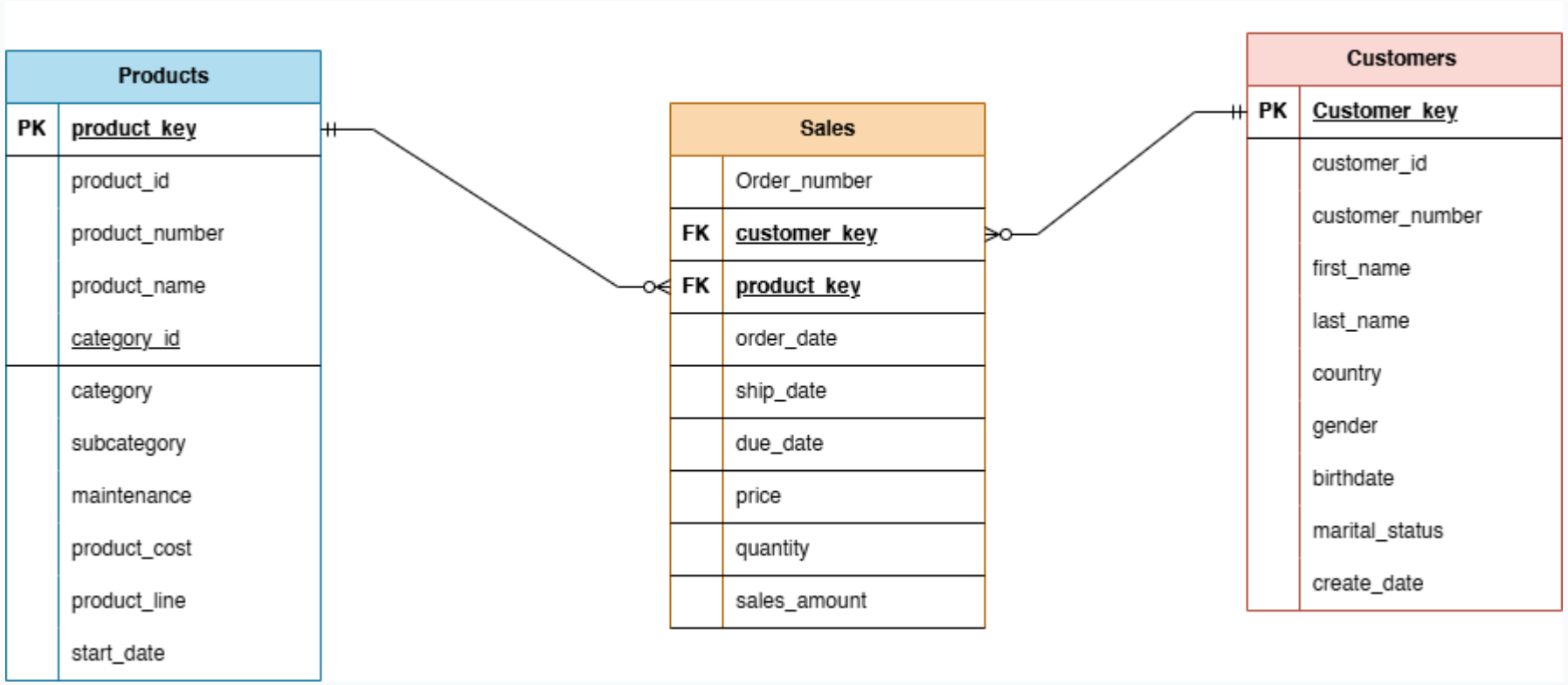

PART

02

Analytics & Reporting

12 SQL Scripts · EDA · Time Intelligence · Segmentation · BI Reports

- 01–03 Exploration
- 04–06 Magnitude & KPIs
- 07–08 Time Intelligence
- 09–10 Period Comparisons
- 11–12 Reports

DATASET OVERVIEW

Key Metrics — December 2010 to January 2014

Gold Layer tables profiled across 3+ years of retail sales transactions.

$29.35M
Total Revenue

60,379
Total Orders

18,484
Unique Customers

295
Products Sold

$486
Avg Price / Item

~$1,588
Avg Revenue / Customer

Top Markets by Revenue

US United States $9.16M

AU Australia $9.06M

GB UK $3.39M

DE Germany $2.89M

FR Fr $2.74M

Geographic Concentration: USA + Australia = 62% of Revenue

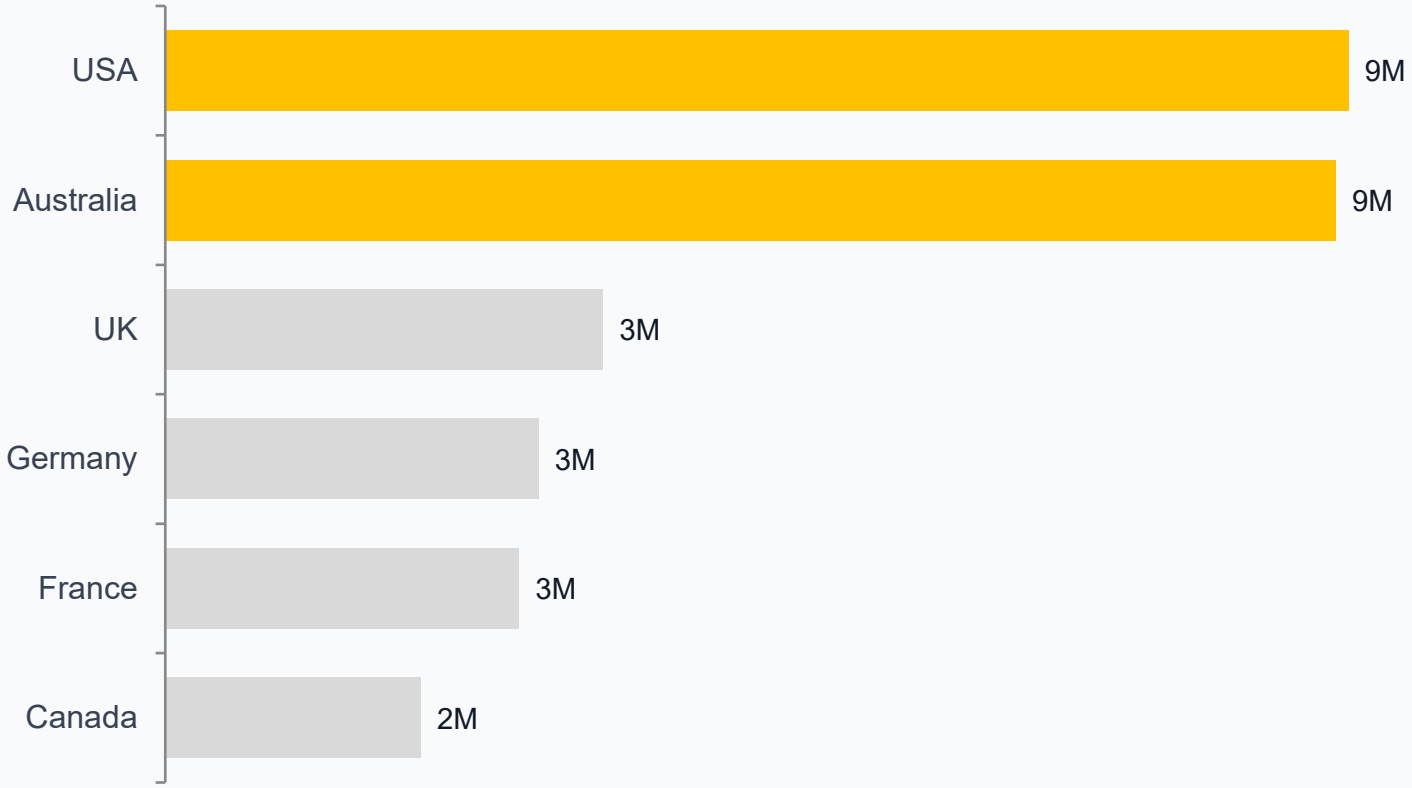

Revenue Concentration Risk

USA + Australia drive 62% of all revenue. A downturn in either market creates a ~$1.8M impact.

Highest AOV Markets

Australia ($678 avg) and Germany ($514 avg) outperform on order value — premium positioning opportunity.

Canada — Growth Gap

Canada generates $1.98M vs $9M+ for peers. Significant untapped growth potential in a comparable market.

Customer Tiers: 79% Are New — VIPs Carry Disproportionate Revenue

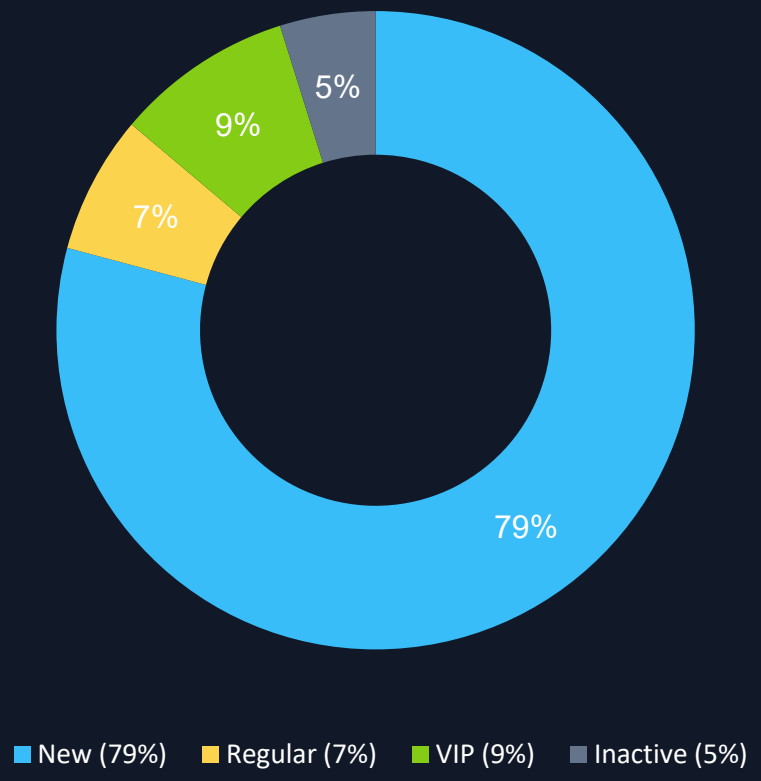

New Customer

14,631 · 79%

`Lifespan < 12 months or orders = 1`

Largest group. High onboarding potential. Push to Regular with repeat purchase offers.

- Welcome & onboarding journey
- First repeat purchase discount
- Trust-building campaigns

Regular

1,293 · 7%

`12–24 months lifespan, ≥ 2 orders`

Stable buyers with growth runway. Loyalty programs can move them toward VIP.

- Loyalty tier progression
- Upsell & cross-sell offers
- Frequency incentives

VIP

1,665 · 9%

`Lifespan > 24 months, ≥ 5 orders`

Long-term, high-value customers likely driving majority of revenue. Protect at all costs.

- VIP retention perks
- Early access & exclusives
- Referral programs

Inactive

895 · 5%

`No purchase in > 12 months`

Churned. Low-cost win-back campaigns (email) may recover a meaningful portion.

- Win-back campaigns
- Seasonal nudges
- Reactivation discounts

Seasonality & Trends: Q4 Dominates, December Peaks at $3.21M

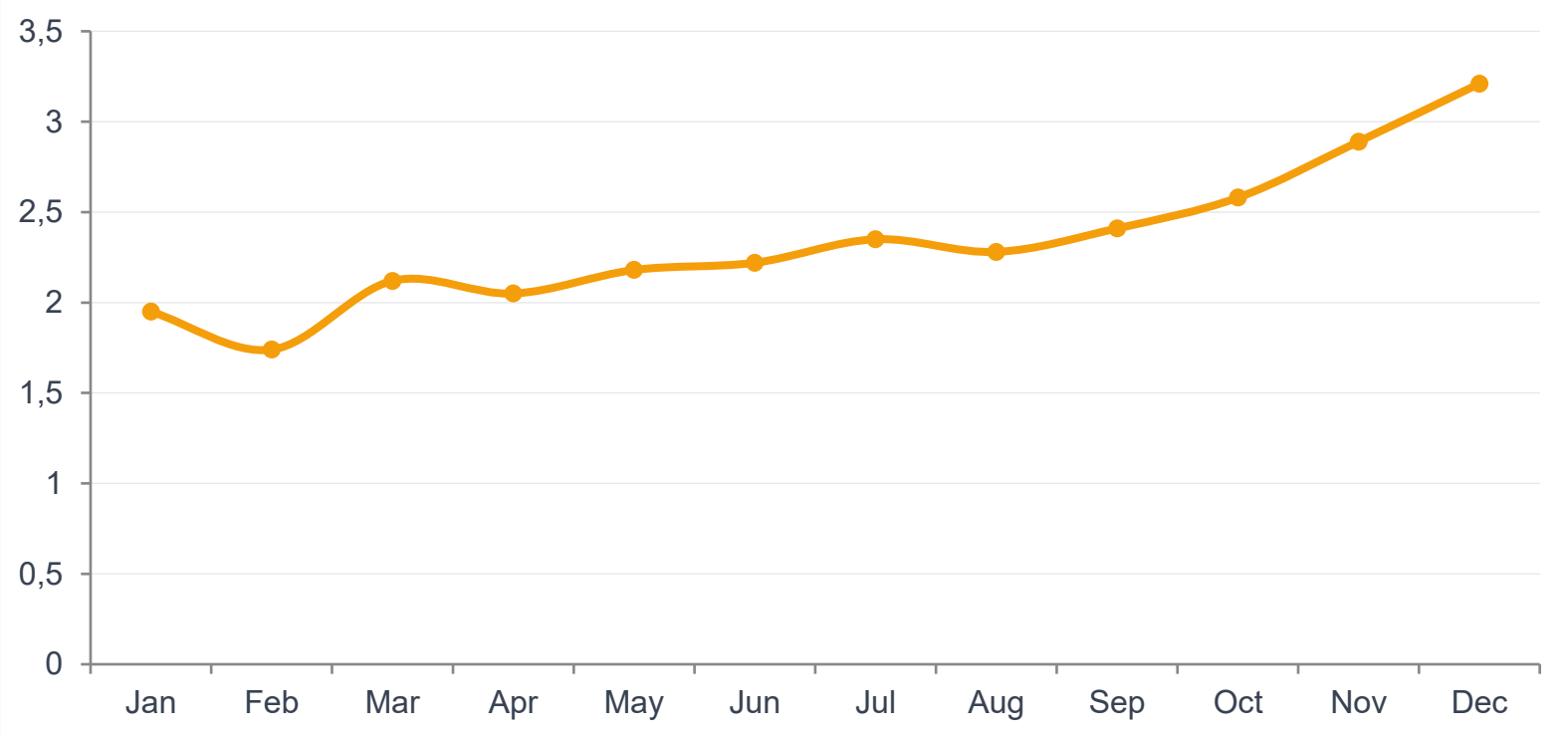

Q1 Jan–Mar	Q2 Apr–Jun	Q3 Jul–Sep	Q4 Oct–Dec
$5.81M · 17%	$6.45M · 22%	$7.04M · 24%	$8.68M · 30%

December Peak

$3.21M

Driven by Black Friday, Cyber Monday, holiday shopping

February Trough

$1.74M

Lowest revenue month. Opportunity for clearance or new launches

Q4 Dominance

30%

Oct–Dec = 30% of annual revenue. Pre-position inventory by September

ADVANCED ANALYTICS

5 Analytical Techniques — Beyond Simple Aggregations

01 Running Totals

Shows compounding revenue accumulation — reveals whether growth is consistent or spiking.

02 Moving Averages

Smooths seasonal noise to reveal the true underlying growth trajectory.

03 YoY Comparison

Compares each month to the same period last year — separates growth from seasonality.

04 Part-to-Whole

Identifies which segments, countries, or products account for the bulk of revenue.

05 Top-N Ranking

Surfaces top-performing products and customers — enables Pareto (80/20) analysis.

Two BI-Ready Reports — Ad Hoc Analytics & Dashboard Input

customer_report

Profile Fields

customer_key
customer_name
age
age_group
gender
country
customer_segment

Aggregated KPIs

total_orders	COUNT(DISTINCT order_number)
total_sales	SUM(sales_amount)
lifespan	DATEDIFF(month, first, last)
recency	Months since last purchase
avg_order_value	total_sales / total_orders
avg_monthly_spend	total_sales / lifespan

product_report

Profile Fields

product_key
product_name
category
subcategory
cost
product_line
product_segment

Aggregated KPIs

total_orders	COUNT(DISTINCT order_number)
total_sales	SUM(sales_amount)
total_customers	COUNT(DISTINCT customer_key)
recency	Months since last sale
avg_order_revenue	total_sales / total_orders
avg_monthly_revenue	total_sales / lifespan

STRATEGIC RECOMMENDATIONS

4 Data-Driven Actions for Business Growth

01 Build a Customer Retention Funnel

Finding: 79% of customers are New — VIPs are only 9% but likely drive the majority of revenue.

- Design onboarding journeys for New Customers
- Create loyalty progression: New → Regular → VIP
- Target: reduce New % to <65% within 12 months

02 Reduce Geographic Concentration

Finding: USA + Australia = 62% of revenue. A 10% decline in either is a ~$1.8M impact.

- Invest in UK, Canada, and France as growth markets
- Set target: no single country >30% of revenue
- Tailor campaigns by market — AOV varies significantly

03 Capitalize on Q4 Seasonality

Finding: Q4 (Oct–Dec) generates 30% of annual revenue. December alone = $3.21M.

- Pre-position inventory by September for Q4 peak
- Launch Black Friday campaigns 3 weeks early
- Counter February low with clearance / new launches

04 Invest in Top Product Lines

Finding: Road Bikes and Mountain Bikes dominate revenue. Long-tail SKUs have minimal impact.

- Concentrate marketing on top-performing subcategories
- Rationalize underperforming SKUs (low AOR, high recency)
- Track AOR and monthly revenue via product_report

SQL DATA WAREHOUSE
& ANALYTICS PROJECT

From Raw CSVs to Business Intelligence

- Medallion Architecture (Bronze / Silver / Gold) built entirely in SQL Server
- ERP + CRM integrated into a clean Star Schema ready for any BI tool
- $29.35M in revenue analyzed across 18,484 customers and 60,379 orders
- 12 progressive SQL scripts — from schema profiling to executive-level reports
- Customer & Product reports ready for Power BI, Tableau, or ad hoc analytics
- 4 strategic recommendations backed by data: geography, retention, seasonality, products